# Deep groove ball bearing 30TAU08F-2NSEGM NACHI

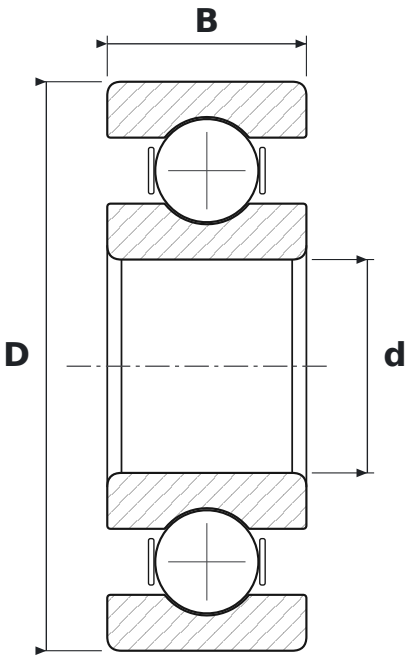


## DIMENSIONS

| | | |
|---|---|---|
| **d** | bore diameter | **30 mm** |
| **D** | outside diameter | **80 mm** |
| **B** | width | **28 mm** |

## SPECIFICATIONS

| | |
|---|---|
| Manufacturer | **NACHI** |
| Manufacturer designation | **30TAU08F-2NSEGM** |
| Rolling elements | **single-row ball bearing** |
| Radial internal clearance | **CN – normal** |