Cylindrical roller bearing NJ221-EM1 FAG

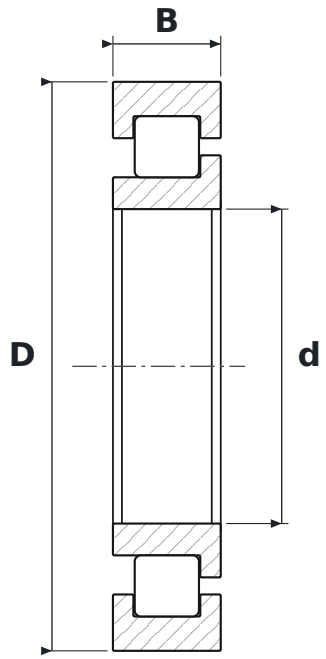

DIMENSIONS

d	bore diameter	**105 mm**
D	outside diameter	**190 mm**
B	width	**36 mm**

WHAT NJ221-EM1 MEANS

E	reinforced design, higher load rating
M1	koszyk mosiężny masywny, dwuczęściowy, prowadzony na wałeczkach

SPECIFICATIONS

Manufacturer	**FAG**
Manufacturer designation	**NJ221-EM1**
Rolling elements	**single-row cylindrical roller bearing**