Deep groove ball bearing 6409 NR NTN

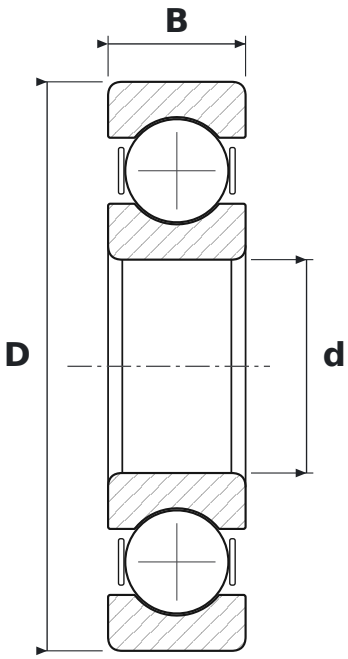

DIMENSIONS

d	bore diameter	**45 mm**
D	outside diameter	**120 mm**
B	width	**29 mm**

WHAT 6409 NR MEANS

64	łożysko kulkowe zwykłe (6), seria średnic 4 – ciężka
NR	snap ring groove with snap ring

SPECIFICATIONS

Manufacturer	**NTN**
Manufacturer designation	**6409 NR**
Rolling elements	**single-row ball bearing**