Cylindrical roller bearing NJ214 WC3 NSK

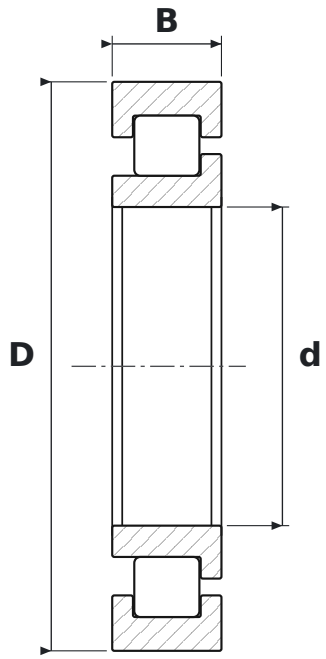

DIMENSIONS

d	bore diameter	**70 mm**
D	outside diameter	**125 mm**
B	width	**24 mm**

WHAT NJ214 WC3 MEANS

W	koszyk stalowy tłoczony
C3	radial clearance greater than normal

SPECIFICATIONS

Manufacturer	**NSK**
Manufacturer designation	**NJ214 WC3**
Rolling elements	**single-row cylindrical roller bearing**