Cylindrical roller bearing NJ306 EWC3 NSK

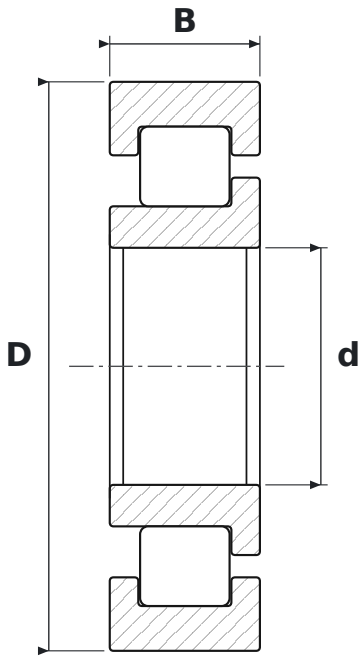

DIMENSIONS

d	bore diameter	**30 mm**
D	outside diameter	**72 mm**
B	width	**19 mm**

WHAT NJ306 EWC3 MEANS

EW	reinforced design, steel cage (NSK)
C3	radial clearance greater than normal

SPECIFICATIONS

Manufacturer	**NSK**
Manufacturer designation	**NJ306 EWC3**
Rolling elements	**single-row cylindrical roller bearing**