Cylindrical roller bearing NJ317 WC3 NSK

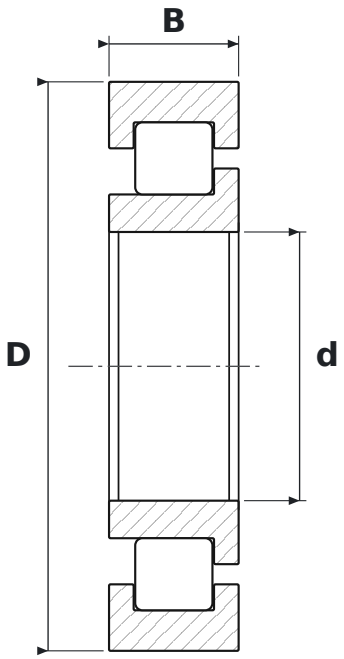

DIMENSIONS

d	bore diameter	**85 mm**
D	outside diameter	**180 mm**
B	width	**41 mm**

WHAT NJ317 WC3 MEANS

W	koszyk stalowy tłoczony
C3	radial clearance greater than normal

SPECIFICATIONS

Manufacturer	**NSK**
Manufacturer designation	**NJ317 WC3**
Rolling elements	**single-row cylindrical roller bearing**