Deep groove ball bearing 4307 ATN9 SKF

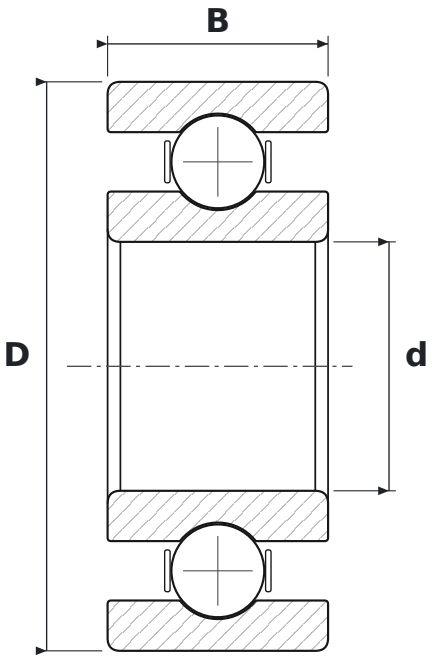

DIMENSIONS

d	bore diameter	**35 mm**
D	outside diameter	**80 mm**
B	width	**31 mm**

WHAT 4307 ATN9 MEANS

A	zmieniona konstrukcja wewnętrzna
TN9	glass-fibre reinforced PA66 cage (SKF)

SPECIFICATIONS

Manufacturer	**SKF**
Manufacturer designation	**4307 ATN9**
Rolling elements	**double-row ball bearing**