Deep groove ball bearing 6804-ZZC3 NSK

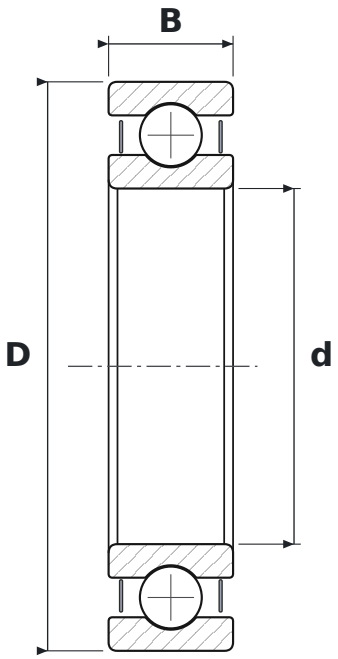

DIMENSIONS

d	bore diameter	**20 mm**
D	outside diameter	**32 mm**
B	width	**7 mm**

WHAT 6804-ZZC3 MEANS

ZZ	blaszki ochronne, dwustronne
C3	radial clearance greater than normal

SPECIFICATIONS

Manufacturer	**NSK**
Manufacturer designation	**6804-ZZC3**
Rolling elements	**single-row ball bearing**