Cylindrical roller bearing NJ219 ECJC3 SKF

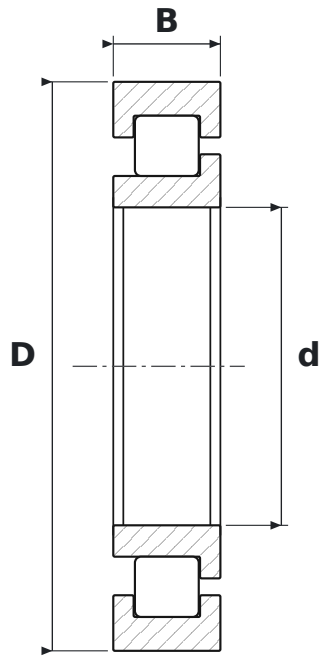

DIMENSIONS

d	bore diameter	**95 mm**
D	outside diameter	**170 mm**
B	width	**32 mm**

WHAT NJ219 ECJC3 MEANS

ECJ	EC design, pressed steel cage (SKF)
C3	radial clearance greater than normal

SPECIFICATIONS

Manufacturer	**SKF**
Manufacturer designation	**NJ219 ECJC3**
Rolling elements	**single-row cylindrical roller bearing**