Deep groove ball bearing F6001-2ZP6 ZEN

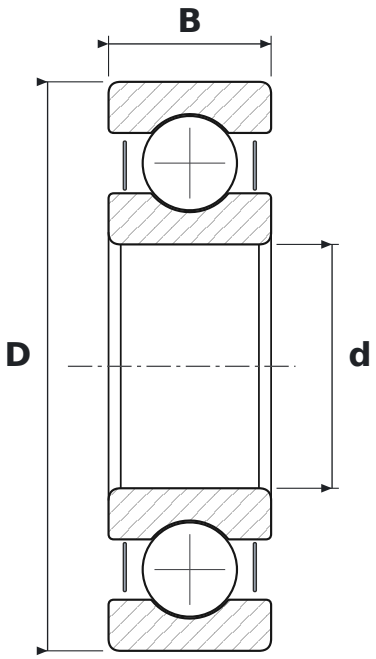

DIMENSIONS

d	bore diameter	**12 mm**
D	outside diameter	**28 mm**
B	width	**8 mm**

WHAT F6001-2ZP6 MEANS

2Z	steel shields, both sides
P6	tolerance class P6

SPECIFICATIONS

Manufacturer	**ZEN**
Manufacturer designation	**F6001-2ZP6**
Rolling elements	**single-row ball bearing**