Deep groove ball bearing 6908-LLU5K NTN

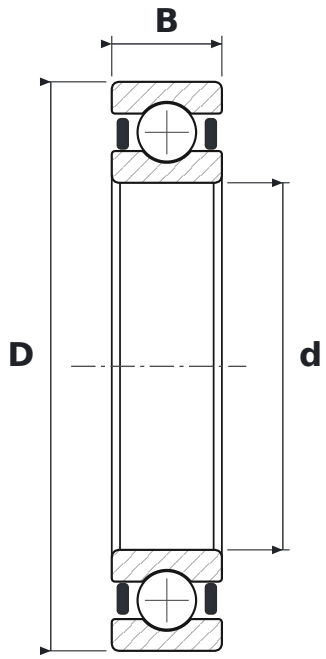

DIMENSIONS

d	bore diameter	**40 mm**
D	outside diameter	**62 mm**
B	width	**12 mm**

WHAT 6908-LLU5K MEANS

LLU	uszczelnienia stykowe z kauczuku nitrylowego (NBR), dwustronne, od −20 do +120 °C
5K	smar Kyodo Yushi Multemp SRL (od −40 do +150 °C)

SPECIFICATIONS

Manufacturer	**NTN**
Manufacturer designation	**6908-LLU5K**
Rolling elements	**single-row ball bearing**