Cylindrical roller bearing NU232 ECML SKF

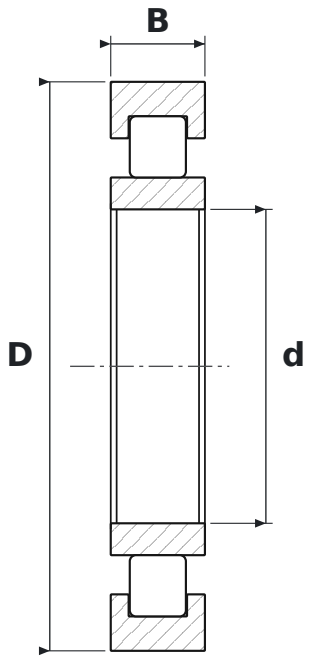

DIMENSIONS

d	bore diameter	**160 mm**
D	outside diameter	**290 mm**
B	width	**48 mm**

WHAT NU232 ECML MEANS

EC	reinforced EC design, more rollers (SKF)
ML	koszyk mosiężny masywny okienkowy, prowadzony na pierścieniu wewnętrznym lub zewnętrznym

SPECIFICATIONS

Manufacturer	**SKF**
Manufacturer designation	**NU232 ECML**
Rolling elements	**single-row cylindrical roller bearing**