Track roller LR204 X-2RSR INA

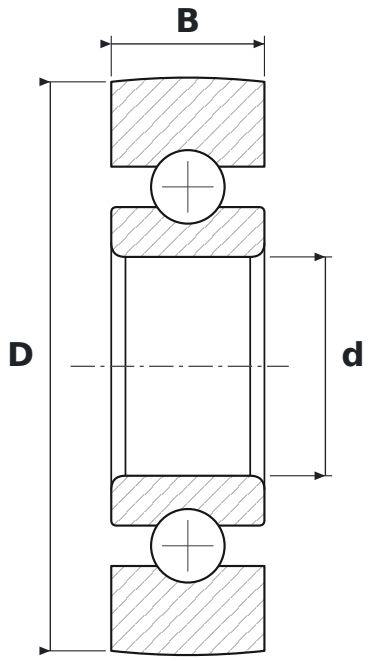

DIMENSIONS

d	bore diameter	**20 mm**
D	outside diameter	**52 mm**
B	width	**14 mm**

SPECIFICATIONS

Manufacturer	**INA**
Manufacturer designation	**LR204 X-2RSR**
Rolling elements	**single-row ball bearing**
2RS	**contact rubber seals, both sides**