Deep groove ball bearing 6403-ZZC35K NTN

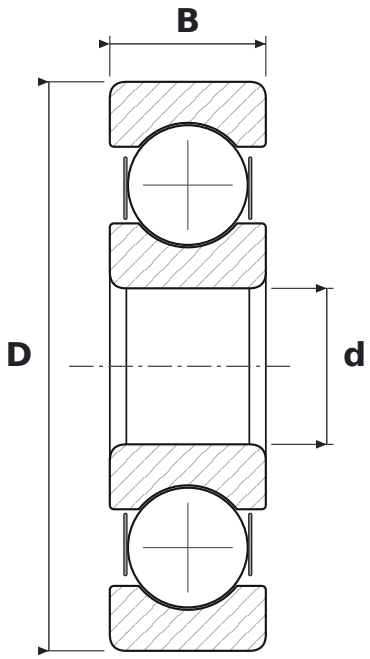

DIMENSIONS

d	bore diameter	**17 mm**
D	outside diameter	**62 mm**
B	width	**17 mm**

WHAT 6403-ZZC35K MEANS

64	łożysko kulkowe zwykłe (6), seria średnic 4 – ciężka
ZZ	blaszki ochronne, dwustronne
C3	radial clearance greater than normal
5K	smar Kyodo Yushi Multemp SRL (od −40 do +150 °C)

SPECIFICATIONS

Manufacturer	**NTN**
Manufacturer designation	**6403-ZZC35K**
Rolling elements	**single-row ball bearing**