Cylindrical roller bearing NCF3032 VC3 ZEN

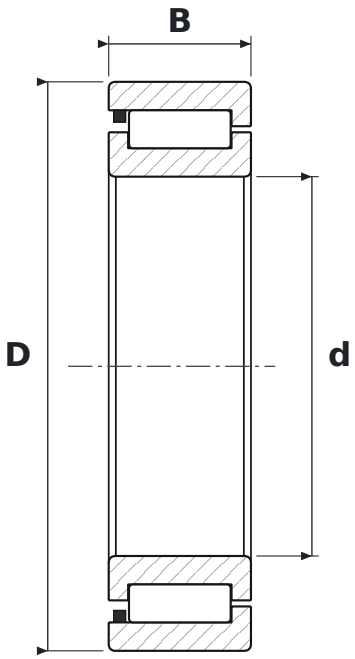

DIMENSIONS

d	bore diameter	**160 mm**
D	outside diameter	**240 mm**
B	width	**60 mm**

SPECIFICATIONS

Manufacturer	**ZEN**
Manufacturer designation	**NCF3032 VC3**
Rolling elements	**single-row cylindrical roller bearing, full complement**
V	**manufacturer design code**
C3	**radial clearance greater than normal**
Seal	**open – no seals**