Deep groove ball bearing 3004-2RSC3 INA

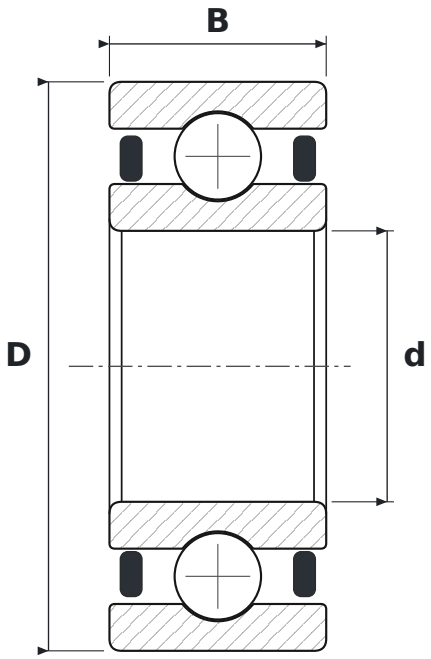

DIMENSIONS

d	bore diameter	**20 mm**
D	outside diameter	**42 mm**
B	width	**16 mm**

WHAT 3004-2RSC3 MEANS

2RS	contact rubber seals, both sides
C3	radial clearance greater than normal

SPECIFICATIONS

Manufacturer	**INA**
Manufacturer designation	**3004-2RSC3**
Rolling elements	**single-row ball bearing**