Cylindrical roller bearing NUP309 ECP SKF

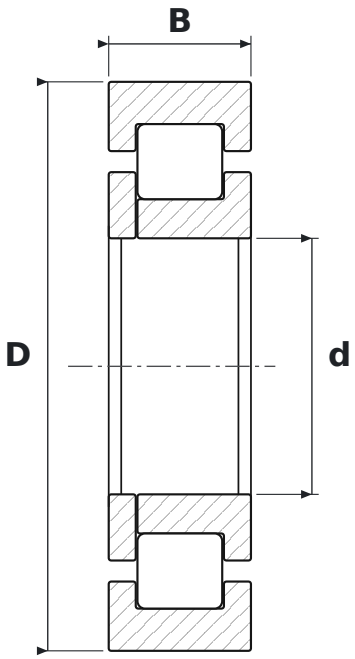

DIMENSIONS

d	bore diameter	**45 mm**
D	outside diameter	**100 mm**
B	width	**25 mm**

SPECIFICATIONS

Manufacturer	**SKF**
Manufacturer designation	**NUP309 ECP**
Rolling elements	**single-row cylindrical roller bearing**
ECP	**EC design, polyamide cage (SKF)**
Seal	**open – no seals**
Radial internal clearance	**CN – normal**
Cage	**Polyamide**