# Deep groove ball bearing 6330 MC3 SKF

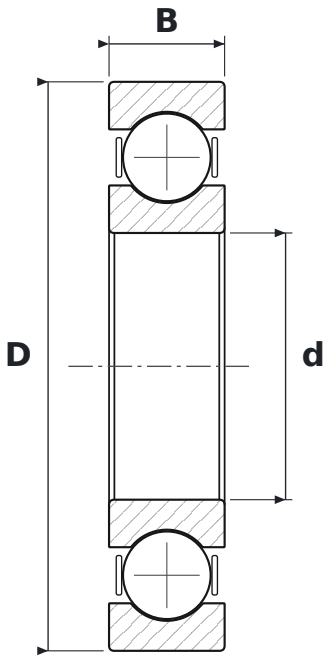


## DIMENSIONS

| | | |
|---|---|---|
| **d** | bore diameter | **150 mm** |
| **D** | outside diameter | **320 mm** |
| **B** | width | **65 mm** |

## WHAT 6330 MC3 MEANS

| | |
|---|---|
| **63** | łożysko kulkowe zwykłe (6), seria średnic 3 – średnia |
| **M** | machined brass cage |
| **C3** | radial clearance greater than normal |

## SPECIFICATIONS

| | |
|---|---|
| Manufacturer | **SKF** |
| Manufacturer designation | **6330 MC3** |
| Rolling elements | **single-row ball bearing** |