Deep groove ball bearing W6000-2Z SKF

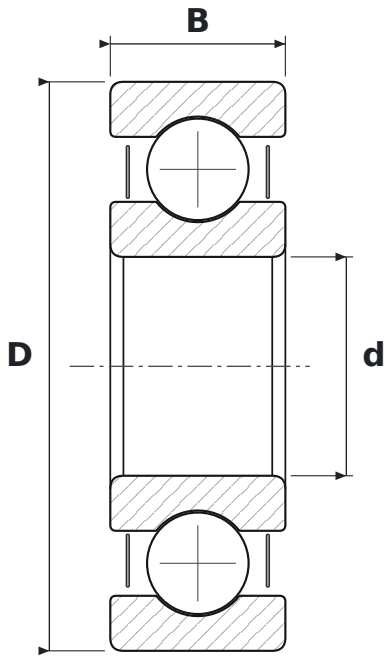

DIMENSIONS

d	bore diameter	**10 mm**
D	outside diameter	**26 mm**
B	width	**8 mm**

SPECIFICATIONS

Manufacturer	**SKF**
Manufacturer designation	**W6000-2Z**
Rolling elements	**single-row ball bearing**
2Z	**steel shields, both sides**
Radial internal clearance	**CN – normal**
Features	**Stainless steel**
Basic dynamic load rating C	**4.75 kN**
Basic static load rating C0	**1.96 kN**