Deep groove ball bearing 6311 C3 SKF

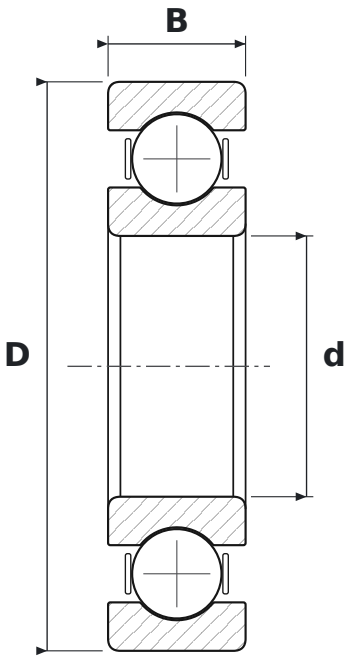

DIMENSIONS

d	bore diameter	**55 mm**
D	outside diameter	**120 mm**
B	width	**29 mm**

WHAT 6311 C3 MEANS

63	łożysko kulkowe zwykłe (6), seria średnic 3 – średnia
C3	radial clearance greater than normal

SPECIFICATIONS

Manufacturer	**SKF**
Manufacturer designation	**6311 C3**
Rolling elements	**single-row ball bearing**
Basic dynamic load rating C	**74.1 kN**
Basic static load rating C0	**45 kN**