# Deep groove ball bearing 62800-2RS ZEN

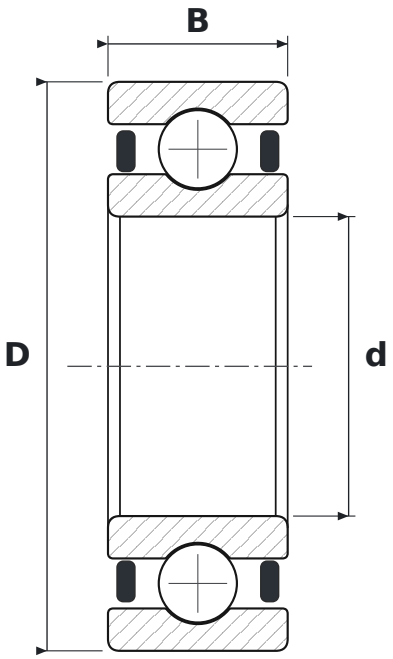


## DIMENSIONS

| | | |
|---|---|---|
| **d** | bore diameter | **10 mm** |
| **D** | outside diameter | **19 mm** |
| **B** | width | **6 mm** |

## SPECIFICATIONS

| | |
|---|---|
| Manufacturer | **ZEN** |
| Manufacturer designation | **62800-2RS** |
| Rolling elements | **single-row ball bearing** |
| 2RS | **uszczelnienia stykowe z gumy syntetycznej, dwustronne (od −20 do +110 °C)** |
| Radial internal clearance | **CN – normal** |