Spherical plain bearing GE140 ES2RS NKE

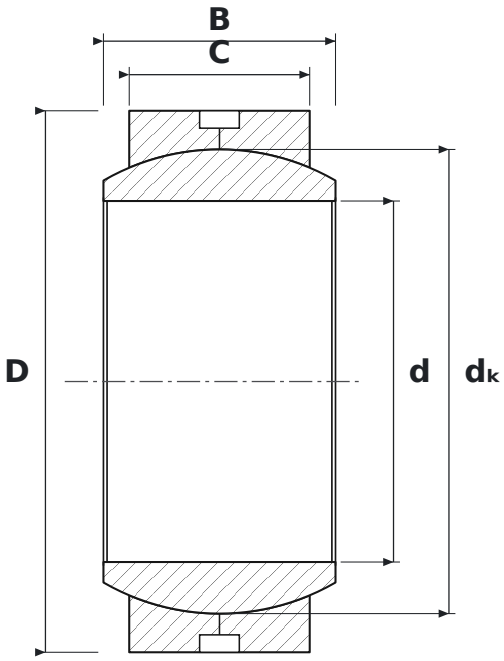

DIMENSIONS

d	bore diameter	**140 mm**
D	outside diameter	**210 mm**
B	inner ring (ball) width	**90 mm**
C	outer ring width	**70 mm**
dK	ball diameter	**180 mm**

SPECIFICATIONS

Manufacturer	**NKE**
Manufacturer designation	**GE140 ES2RS**
C – outer ring width	**70 mm**
Rolling elements	**plain bearing (no rolling elements)**
E	**reinforced design, higher load rating**
2RS	**contact rubber seals, both sides**
Features	**Lubrication groove and holes**