Spherical plain bearing GE17 ES2RS NKE

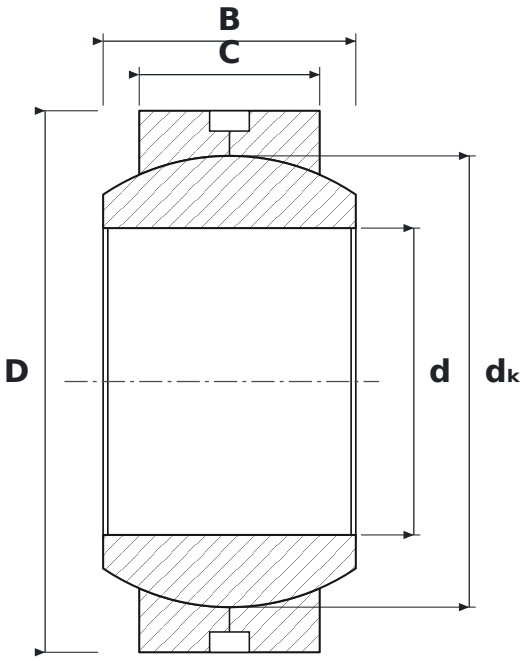

DIMENSIONS

d	bore diameter	**17 mm**
D	outside diameter	**30 mm**
B	inner ring (ball) width	**14 mm**
C	outer ring width	**10 mm**
dK	ball diameter	**25 mm**

SPECIFICATIONS

Manufacturer	**NKE**
Manufacturer designation	**GE17 ES2RS**
C – outer ring width	**10 mm**
Rolling elements	**plain bearing (no rolling elements)**
Features	**Lubrication groove and holes**