Deep groove ball bearing 609 C3 SKF

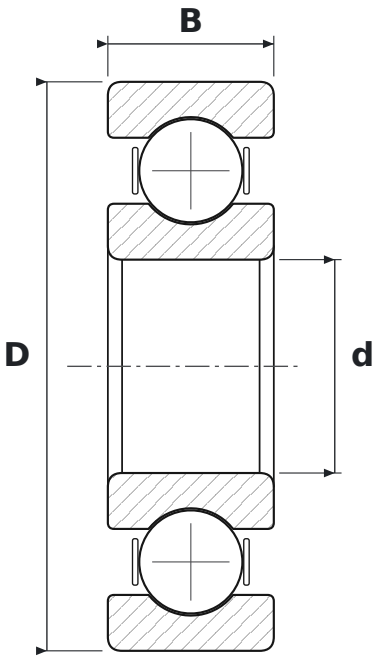

DIMENSIONS

d	bore diameter	**9 mm**
D	outside diameter	**24 mm**
B	width	**7 mm**

SPECIFICATIONS

Manufacturer	**SKF**
Manufacturer designation	**609 C3**
Rolling elements	**single-row ball bearing**
C3	**radial clearance greater than normal**
Seal	**open – no seals**