Deep groove ball bearing 6804 JRLLU5K NTN

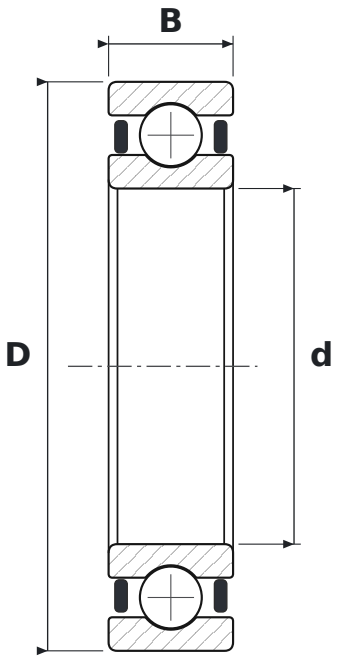

DIMENSIONS

d	bore diameter	**20 mm**
D	outside diameter	**32 mm**
B	width	**7 mm**

WHAT 6804 JRLLU5K MEANS

JR	riveted pressed steel cage (FAG)
LLU	uszczelnienia stykowe z kauczuku nitrylowego (NBR), dwustronne, od −20 do +120 °C
5K	smar Kyodo Yushi Multemp SRL (od −40 do +150 °C)

SPECIFICATIONS

Manufacturer	**NTN**
Manufacturer designation	**6804 JRLLU5K**
Rolling elements	**single-row ball bearing**