Deep groove ball bearing 6003-ZZNR NSK

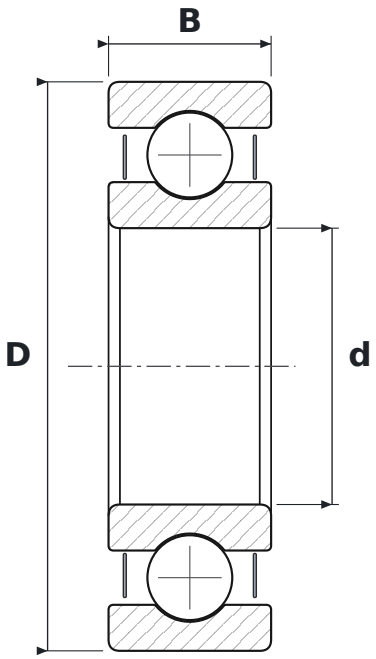

DIMENSIONS

d	bore diameter	**17 mm**
D	outside diameter	**35 mm**
B	width	**10 mm**

WHAT 6003-ZZNR MEANS

60	łożysko kulkowe zwykłe (6), seria średnic 0 – bardzo lekka
ZZ	blaszki ochronne, dwustronne
NR	snap ring groove with snap ring

SPECIFICATIONS

Manufacturer	**NSK**
Manufacturer designation	**6003-ZZNR**
Rolling elements	**single-row ball bearing**