Deep groove ball bearing 62312 ZEN

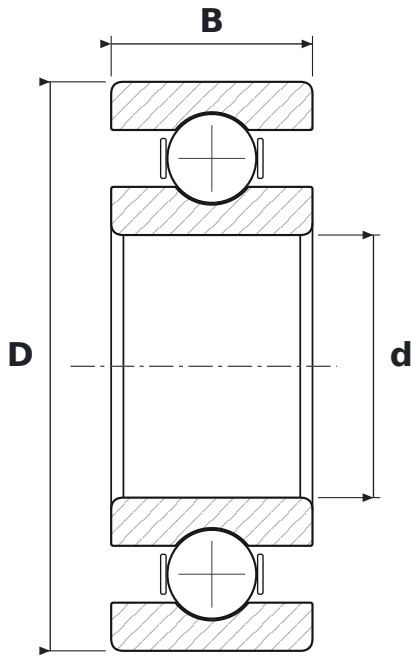

DIMENSIONS

d	bore diameter	**60 mm**
D	outside diameter	**130 mm**
B	width	**46 mm**

SPECIFICATIONS

Manufacturer	**ZEN**
Manufacturer designation	**62312**
Rolling elements	**single-row ball bearing**
Seal	**open – no seals**
Radial internal clearance	**CN – normal**