Deep groove ball bearing 6340-M FAG

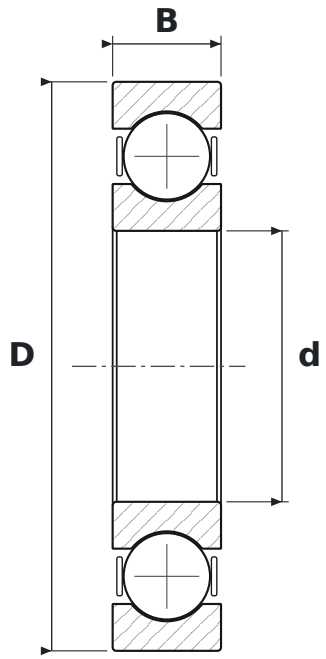

DIMENSIONS

d	bore diameter	**200 mm**
D	outside diameter	**420 mm**
B	width	**80 mm**

WHAT 6340-M MEANS

63	łożysko kulkowe zwykłe (6), seria średnic 3 – średnia
M	machined brass cage

SPECIFICATIONS

Manufacturer	**FAG**
Manufacturer designation	**6340-M**
Rolling elements	**single-row ball bearing**