Cylindrical roller bearing NJ2315 ECMLC3 SKF

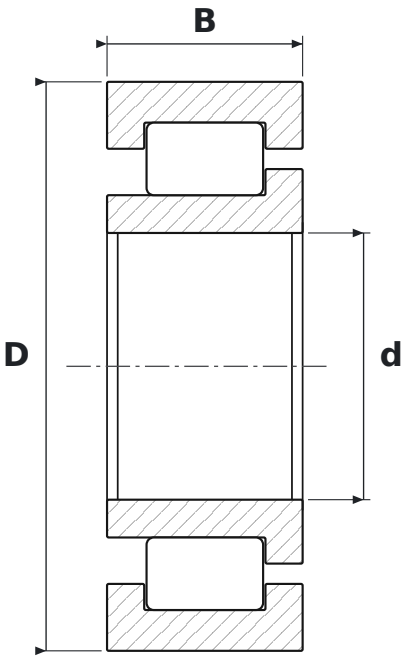

DIMENSIONS

d	bore diameter	**75 mm**
D	outside diameter	**160 mm**
B	width	**55 mm**

WHAT NJ2315 ECMLC3 MEANS

EC	reinforced EC design, more rollers (SKF)
ML	koszyk mosiężny masywny okienkowy, prowadzony na pierścieniu wewnętrznym lub zewnętrznym
C3	radial clearance greater than normal

SPECIFICATIONS

Manufacturer	**SKF**
Manufacturer designation	**NJ2315 ECMLC3**
Rolling elements	**single-row cylindrical roller bearing**