Spherical plain bearing GE35 SX ZEN

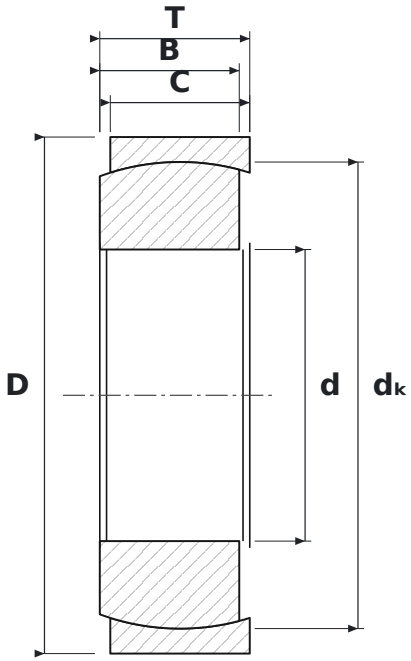

DIMENSIONS

d	bore diameter	**35 mm**
D	outside diameter	**62 mm**
T	total width	**18 mm**
B	inner ring (ball) width	**18 mm**
dK	ball diameter	**56 mm**

SPECIFICATIONS

Manufacturer	**ZEN**
Manufacturer designation	**GE35 SX**
Rolling elements	**plain bearing (no rolling elements)**
Features	**Lubrication groove and holes**