Spherical plain bearing GE17 AX ZEN

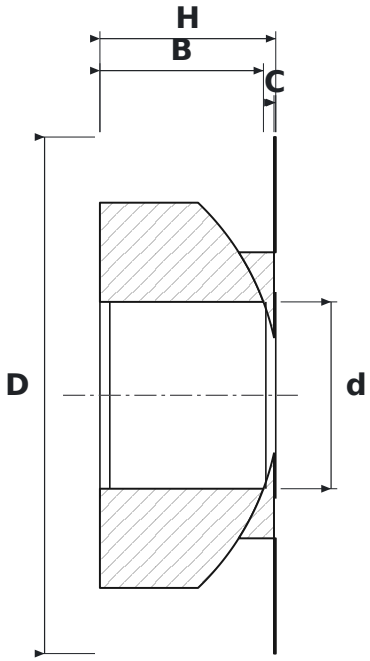

DIMENSIONS

d	bore diameter	**17 mm**
D	outside diameter	**47 mm**
H	height	**16 mm**
B	inner ring (ball) width	**16 mm**
C	outer ring width	**0.16 mm**

SPECIFICATIONS

Manufacturer	**ZEN**
Manufacturer designation	**GE17 AX**
C – outer ring width	**0.16 mm**
Rolling elements	**plain bearing (no rolling elements)**
Features	**Lubrication groove and holes**