Cylindrical roller bearing NJ408-M1-C3 FAG

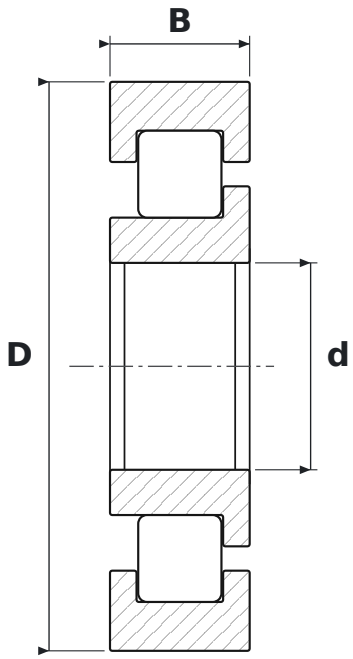

DIMENSIONS

d	bore diameter	**40 mm**
D	outside diameter	**110 mm**
B	width	**27 mm**

WHAT NJ408-M1-C3 MEANS

M1	koszyk mosiężny masywny, dwuczęściowy, prowadzony na wałeczkach
C3	radial clearance greater than normal

SPECIFICATIONS

Manufacturer	**FAG**
Manufacturer designation	**NJ408-M1-C3**
Rolling elements	**single-row cylindrical roller bearing**
Basic dynamic load rating C	**119 kN**
Basic static load rating C0	**95 kN**