CASTOMER

DATASHEET

Deep groove ball bearing 6209 C3 SKF

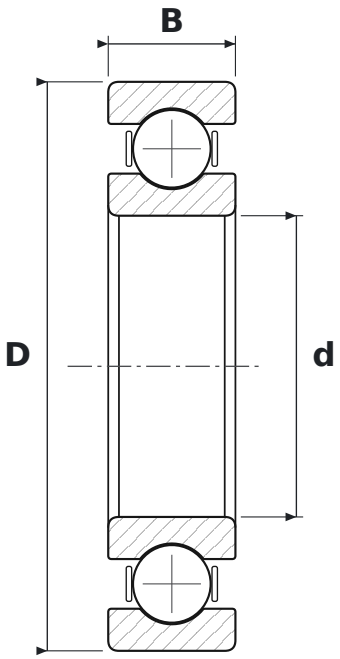

DIMENSIONS

d	bore diameter	**45 mm**
D	outside diameter	**85 mm**
B	width	**19 mm**

WHAT 6209 C3 MEANS

62	łożysko kulkowe zwykłe (6), seria średnic 2 – lekka
C3	radial clearance greater than normal

SPECIFICATIONS

Manufacturer	**SKF**
Manufacturer designation	**6209 C3**
Rolling elements	**single-row ball bearing**
Basic dynamic load rating C	**35.1 kN**
Basic static load rating C0	**21.6 kN**