Deep groove ball bearing 61908-2RZ SKF

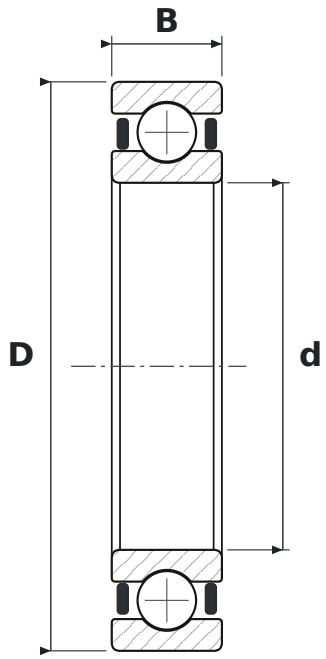

DIMENSIONS

d	bore diameter	**40 mm**
D	outside diameter	**62 mm**
B	width	**12 mm**

WHAT 61908-2RZ MEANS

619	łożysko kulkowe zwykłe (6), seria 19 – cienkościenna
2RZ	non-contact rubber seals, both sides

SPECIFICATIONS

Manufacturer	**SKF**
Manufacturer designation	**61908-2RZ**
Rolling elements	**single-row ball bearing**