Deep groove ball bearing 6902-LLB5K NTN

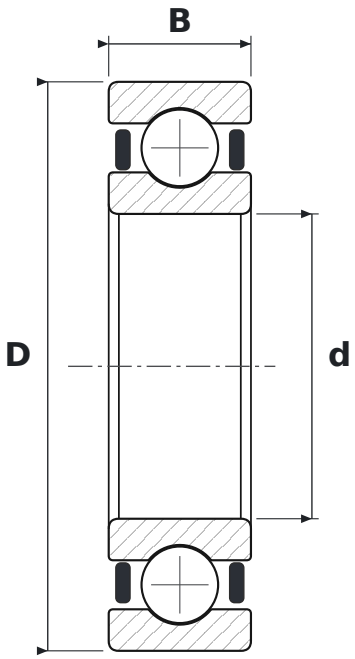

DIMENSIONS

d	bore diameter	**15 mm**
D	outside diameter	**28 mm**
B	width	**7 mm**

WHAT 6902-LLB5K MEANS

LLB	uszczelnienia bezstykowe z kauczuku nitrylowego (NBR), dwustronne, od −25 do +120 °C
5K	smar Kyodo Yushi Multemp SRL (od −40 do +150 °C)

SPECIFICATIONS

Manufacturer	**NTN**
Manufacturer designation	**6902-LLB5K**
Rolling elements	**single-row ball bearing**