Spherical plain bearing GE100 DO INA

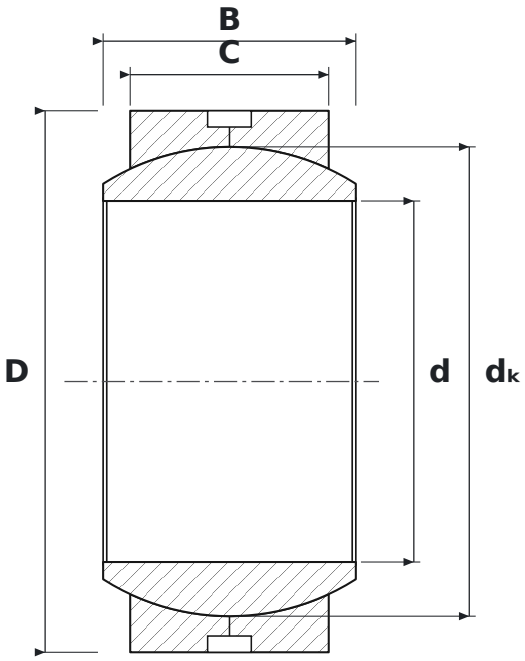

DIMENSIONS

d	bore diameter	**100 mm**
D	outside diameter	**150 mm**
B	inner ring (ball) width	**70 mm**
C	outer ring width	**55 mm**
dK	ball diameter	**130 mm**

SPECIFICATIONS

Manufacturer	**INA**
Manufacturer designation	**GE100 DO**
B – inner ring width	**70 mm**
C – outer ring width	**55 mm**
Rolling elements	**plain bearing (no rolling elements)**
Seal	**open – no seals**
Features	**Lubrication groove and holes**