Deep groove ball bearing 6406-2Z ZEN

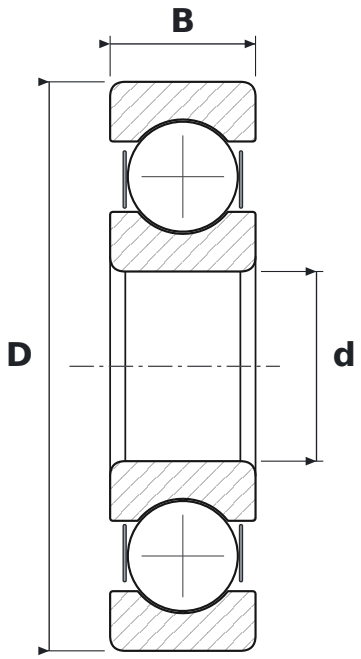

DIMENSIONS

d	bore diameter	**30 mm**
D	outside diameter	**90 mm**
B	width	**23 mm**

WHAT 6406-2Z MEANS

64	łożysko kulkowe zwykłe (6), seria średnic 4 – ciężka
2Z	steel shields, both sides

SPECIFICATIONS

Manufacturer	**ZEN**
Manufacturer designation	**6406-2Z**
Rolling elements	**single-row ball bearing**