# Spherical plain bearing GE140 UK2RS ZEN

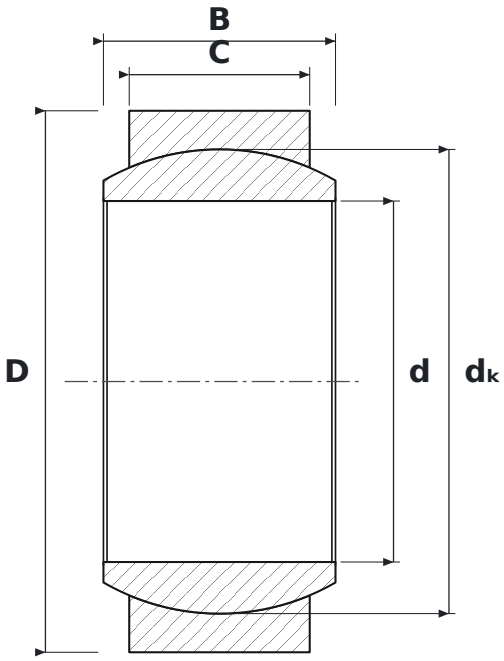


## DIMENSIONS

| | | |
|---|---|---|
| **d** | bore diameter | **140 mm** |
| **D** | outside diameter | **210 mm** |
| **B** | inner ring (ball) width | **90 mm** |
| **C** | outer ring width | **70 mm** |
| **dK** | ball diameter | **180 mm** |

## SPECIFICATIONS

| | |
|---|---|
| Manufacturer | **ZEN** |
| Manufacturer designation | **GE140 UK2RS** |
| C – outer ring width | **70 mm** |
| Rolling elements | **plain bearing (no rolling elements)** |
| K | **tapered bore, taper 1:12** |
| 2RS | **uszczelnienia stykowe z gumy syntetycznej, dwustronne (od −20 do +110 °C)** |