Track roller 361202 R NKE

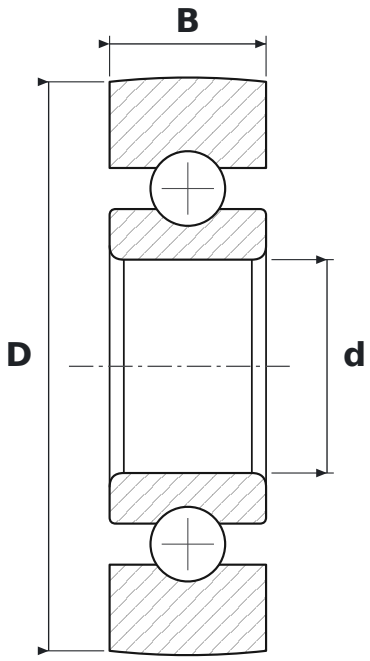

DIMENSIONS

d	bore diameter	**15 mm**
D	outside diameter	**40 mm**
B	width	**11 mm**

SPECIFICATIONS

Manufacturer	**NKE**
Manufacturer designation	**361202 R**
Rolling elements	**single-row ball bearing**
Seal	**open – no seals**