CASTOMER

DATASHEET

Spherical roller bearing 23122 EAKW33 NTN

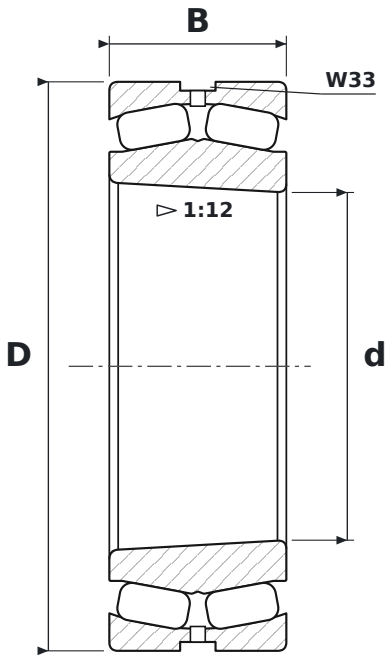

DIMENSIONS

d	bore diameter	**110 mm**
D	outside diameter	**180 mm**
B	width	**56 mm**

WHAT 23122 EAKW33 MEANS

EA	pressed steel cage, high-capacity design (NSK)
K	tapered bore, taper 1:12
W33	lubrication groove and holes in the outer ring

SPECIFICATIONS

Manufacturer	**NTN**
Manufacturer designation	**23122 EAKW33**
Rolling elements	**double-row spherical roller bearing**