Spherical plain bearing GE70 ES NKE

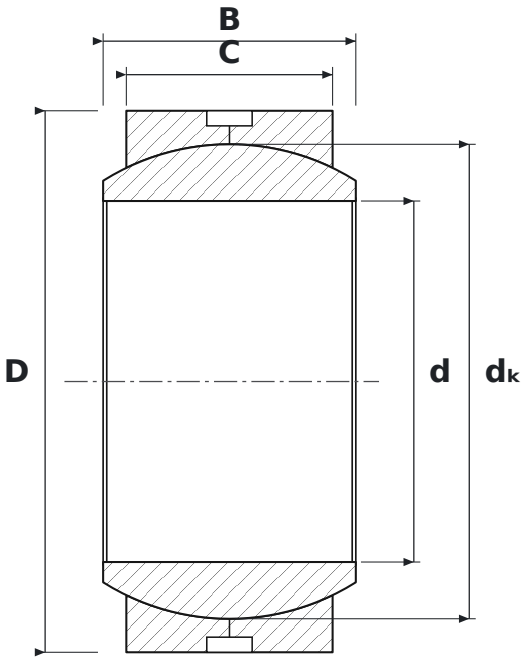

DIMENSIONS

d	bore diameter	**70 mm**
D	outside diameter	**105 mm**
B	inner ring (ball) width	**49 mm**
C	outer ring width	**40 mm**
dK	ball diameter	**92 mm**

SPECIFICATIONS

Manufacturer	**NKE**
Manufacturer designation	**GE70 ES**
C – outer ring width	**40 mm**
Rolling elements	**plain bearing (no rolling elements)**
Features	**Lubrication groove and holes**