# Cylindrical roller bearing NU224 EMC3 NSK

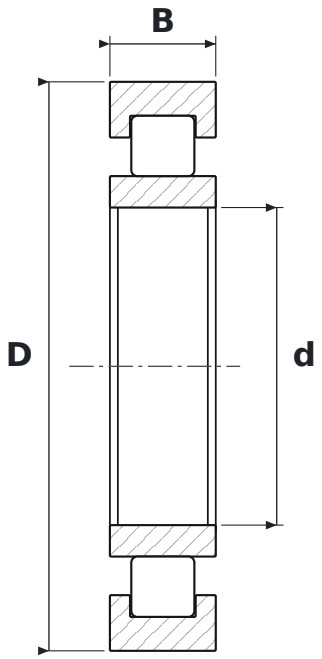


## DIMENSIONS

| | | |
|---|---|---|
| **d** | bore diameter | **120 mm** |
| **D** | outside diameter | **215 mm** |
| **B** | width | **40 mm** |

## WHAT NU224 EMC3 MEANS

| | |
|---|---|
| **EM** | machined brass cage (NSK) |
| **C3** | radial clearance greater than normal |

## SPECIFICATIONS

| | |
|---|---|
| Manufacturer | **NSK** |
| Manufacturer designation | **NU224 EMC3** |
| Rolling elements | **single-row cylindrical roller bearing** |