Deep groove ball bearing 6804 DD NSK

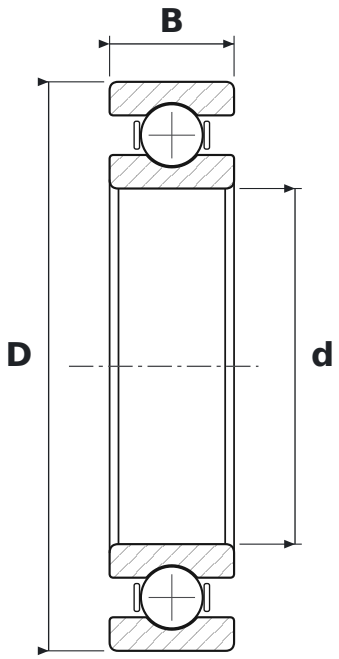

DIMENSIONS

d	bore diameter	**20 mm**
D	outside diameter	**32 mm**
B	width	**7 mm**

SPECIFICATIONS

Manufacturer	**NSK**
Manufacturer designation	**6804 DD**
Rolling elements	**single-row ball bearing**
Seal	**open – no seals**
Radial internal clearance	**CN – normal**