Spherical plain bearing GE100 TXG3A-2LS SKF

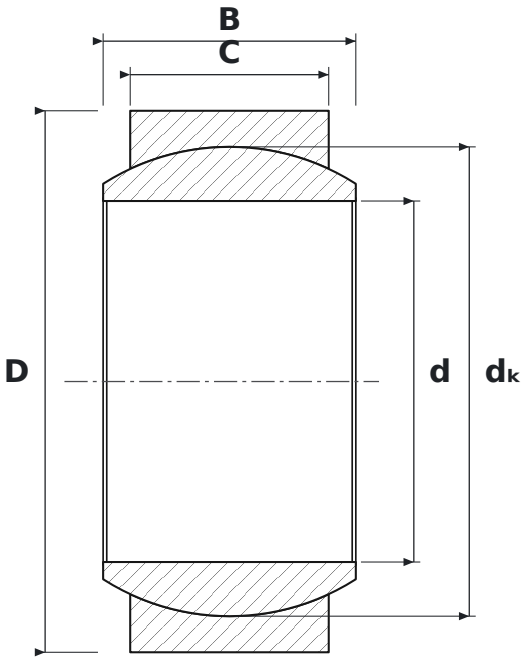

DIMENSIONS

d	bore diameter	**100 mm**
D	outside diameter	**150 mm**
B	inner ring (ball) width	**70 mm**
C	outer ring width	**55 mm**
dK	ball diameter	**130 mm**

SPECIFICATIONS

Manufacturer	**SKF**
Manufacturer designation	**GE100 TXG3A-2LS**
C – outer ring width	**55 mm**
Rolling elements	**plain bearing (no rolling elements)**
2RS	**uszczelnienia dwuwargowe stykowe, dwustronne**