# Deep groove ball bearing 6332 ZEN

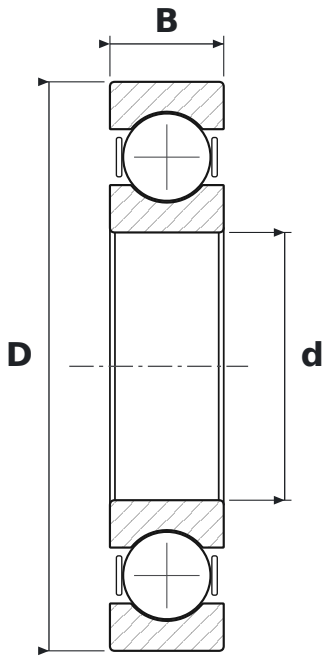


## DIMENSIONS

| | | |
|---|---|---|
| **d** | bore diameter | **160 mm** |
| **D** | outside diameter | **340 mm** |
| **B** | width | **68 mm** |

## SPECIFICATIONS

| | |
|---|---|
| Manufacturer | **ZEN** |
| Manufacturer designation | **6332** |
| Rolling elements | **single-row ball bearing** |
| Seal | **open – no seals** |
| Radial internal clearance | **CN – normal** |