Cylindrical roller bearing RB2008 UUC0 THK

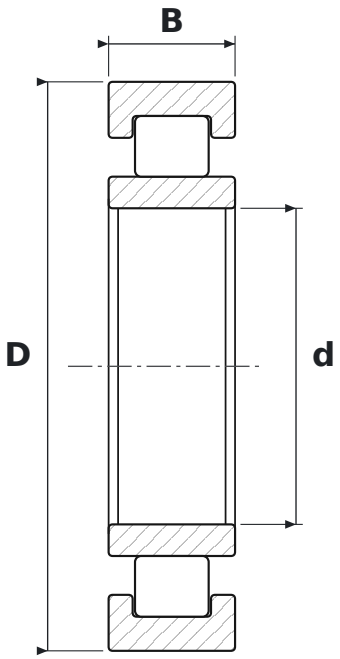

DIMENSIONS

d	bore diameter	**20 mm**
D	outside diameter	**36 mm**
B	width	**8 mm**

WHAT RB2008 UUC0 MEANS

UU	uszczelnienia z obu stron
C0	luz promieniowy C0 – od zera w górę (mały luz dodatni)

SPECIFICATIONS

Manufacturer	**THK**
Manufacturer designation	**RB2008 UUC0**
Rolling elements	**cylindrical roller bearing**