Cylindrical roller bearing NU226 W NSK

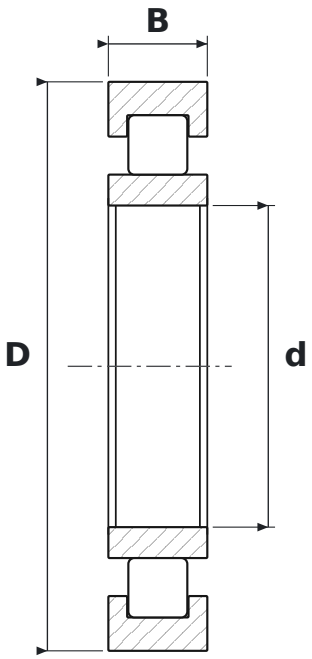

DIMENSIONS

d	bore diameter	**130 mm**
D	outside diameter	**230 mm**
B	width	**40 mm**

SPECIFICATIONS

Manufacturer	**NSK**
Manufacturer designation	**NU226 W**
Rolling elements	**single-row cylindrical roller bearing**
Seal	**open – no seals**
Radial internal clearance	**CN – normal**