# Deep groove ball bearing 6908 VVC3 NSK

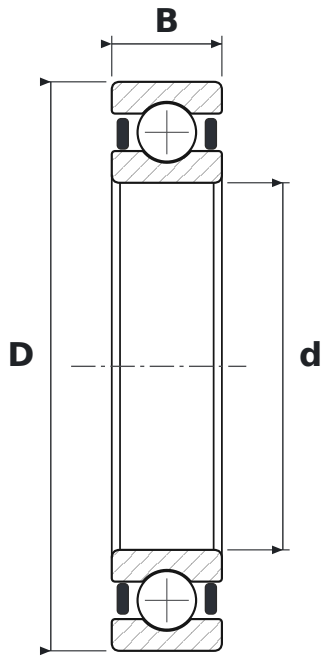


## DIMENSIONS

| | | |
|---|---|---|
| **d** | bore diameter | **40 mm** |
| **D** | outside diameter | **62 mm** |
| **B** | width | **12 mm** |

## WHAT 6908 VVC3 MEANS

| | |
|---|---|
| **VV** | uszczelnienia gumowe bezstykowe, dwustronne, od −10 do +110 °C |
| **C3** | radial clearance greater than normal |

## SPECIFICATIONS

| | |
|---|---|
| Manufacturer | **NSK** |
| Manufacturer designation | **6908 VVC3** |
| Rolling elements | **single-row ball bearing** |