Cylindrical roller bearing N307 WC3 NSK

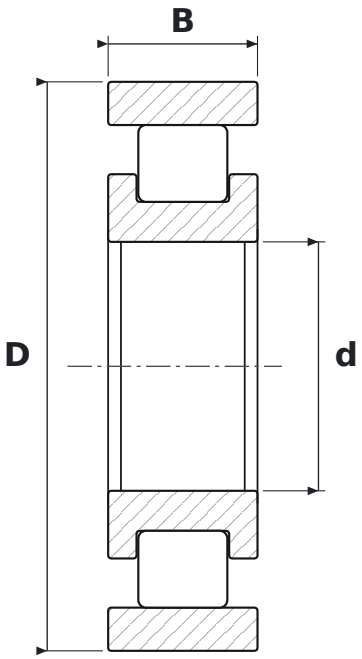

DIMENSIONS

d	bore diameter	**35 mm**
D	outside diameter	**80 mm**
B	width	**21 mm**

WHAT N307 WC3 MEANS

W	koszyk stalowy tłoczony
C3	radial clearance greater than normal

SPECIFICATIONS

Manufacturer	**NSK**
Manufacturer designation	**N307 WC3**
Rolling elements	**single-row cylindrical roller bearing**