Rod end DPHS20 Basic Line DURBAL

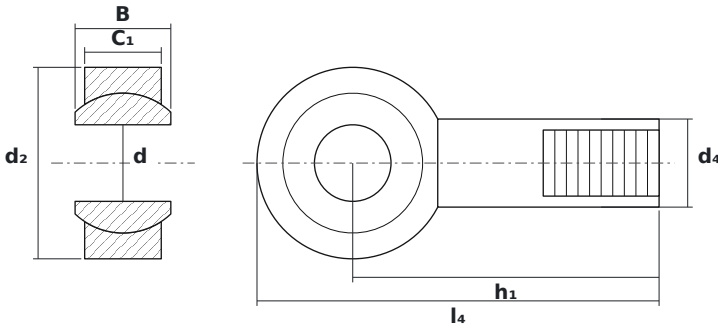

DIMENSIONS

d	bore diameter	**20 mm**
d2	rod end head diameter	**50 mm**
B	ball (inner ring) width	**25 mm**

SPECIFICATIONS

Manufacturer	**DURBAL**
Manufacturer designation	**DPHS20 Basic Line**
Rolling elements	**plain bearing (no rolling elements)**